TMS GmbH

Solutions Provider Co.

made in Germany

Three- Lobe Positive Displacement Blower Vacuum Pump Series TS

Brief introduction to the producing:

- Series TS blower is designed on the base of Series M blower which technology is introduced from America. TS blower has an excellent structure and performance with advanced world level, and featuring a good performance-price ratio.

Main Features:

- High rotary speed (the maximum speed is 5
- 000 rpm), small outline, light weight, and compact structure.
- Air cooling structure, pressure rise 98 kPa, no need of water cooling.
- One piece ductile iron rotors and tri-lobe impeller with good rigidity to ensure a balanced running under the condition of high pressure and large flow.
- Special designed casing ensures reliable running with low noise under the high pressure condition.
- Precision harden-teeth-surface helical timing gears without Key connecting to ensure reliable locating, balanced running with low noise, high rigidity, and long life.
- Oil tank is made in aluminum alloy with light weight and better heat-diffusing effect.
- Compact unit design is applied with auto self-tensioned structure to ensure the belts are always optimally tensioned.
- Special loading-release valve is equipped for the compact unit, which can make blower start running, and close running even if there is no release valve in the pipe system.

Performance:

Blower:

Pressure rise: 9.8~98kPa
Flow capacity: 0.59~112.5 m^3/min
Shaft power: 0.81~159.7 kW

Vacuum Pump:

Vacuum:-9.8 ～ -49kPa
Flow capacity: 1.29~112.8 m^3/min
Shaft power: 0.7~102.2kW

Order information:

- Standard accessories: blower, inlet silencer with filter, outlet silencer, pulley, belts, belts cover, safety valve, check valve, flexible joint, pressure gauge, shock absorber, expansion bolts.
- Optional accessories: motor, electric starter, acoustic enclosure, loading-release valve

Performance Data of TS PD Blower

Type	Rotary Speed r/min	Theoretical Capacity m^3/min	Inlet Capacity Qs(m^3/min),Shaft power La (kW), Motor power Po (kW)																													Motor Pole
			9.8kPa			19.6kPa			29.4kPa			39.2kPa			49kPa			58.8kPa			68.6kPa			78.4kPa			88.2kPa			98kPa			
	n	Qth	Qs	La	Po	Qs	La	Po	Qs	La	Po	Qs	La	Po	Qs	La	Po	Qs	La	Po	Qs	La	Po	Qs	La	Po	Qs	La	Po	Qs	La	P	
TS-50	1450	1.69	1.12	0.7	1.1	0.88	1.0	1.5	0.75	1.2	1.5	0.62	1.5	2.2	0.50	1.8	2.2																4
	2000	2.33	1.76	1.0	1.5	1.42	1.4	2.2	1.33	1.7	2.2	1.23	2.1	3	1.19	2.5	3	1.00	2.9	4	0.93	3.3	4										4
	2500	2.91	2.34	1.2	1.5	2.00	1.7	2.2	1.81	2.1	3	1.71	2.6	4	1.60	3.1	4	1.54	3.6	5.5	1.43	4.0	5.5	1.38	4.5	5.5							2
	3000	3.50	2.93	1.4	2.2	2.59	1.9	3	2.40	2.5	3	2.20	3.1	4	2.06	3.7	5.5	1.93	4.2	5.5	1.88	4.8	7.5	1.80	5.4	7.5	1.70	6.0	7.5				2
	3500	4.08	3.51	1.6	2.2	3.17	2.2	3	2.98	2.9	4	2.78	3.6	5.5	2.64	4.2	5.5	2.51	4.9	7.5	2.38	5.6	7.5	2.25	6.2	7.5	2.18	6.9	11	2.10	7.6	1	2
	4000	4.67	4.10	1.8	2.2	3.76	2.5	3	3.57	3.3	4	3.37	4.1	5.5	3.23	4.8	7.5	3.10	5.6	7.5	2.96	6.3	7.5	2.84	7.1	11	2.77	7.9	11	2.70	8.6	1	2
	4500	5.25	4.68	2.0	3	4.34	2.8	4	4.15	3.7	5.5	3.95	4.5	5.5	3.81	5.4	7.5	3.68	6.3	7.5	3.53	7.1	11	3.42	8.0	11	3.35	8.8	11	3.29	9.7	1	2
	5000	5.83	5.26	2.2	3	4.92	3.1	4	4.73	4.1	5.5	4.53	5.0	7.5	4.39	6.0	7.5	4.26	6.9	11	4.13	7.9	11	4.00	8.8	11	3.93	9.7	15	3.84	10.7	1	2
TS-65	2000	3.92	2.98	1.4	2.2	2.46	2.1	3	2.12	2.7	4	1.78	3.4	4	1.53	4.0	5.5	1.33	4.6	5.5	1.17	5.3	7.5										4
	2500	4.91	3.97	1.8	2.2	3.45	2.6	3	3.11	3.4	4	2.77	4.2	5.5	2.52	5.0	7.5	2.32	5.8	7.5	2.16	6.6	11	2.02	7.4	11	1.91	8.2	11				2
	3000	5.89	4.95	2.2	3	4.43	3.1	4	4.09	4.1	5.5	3.75	5.1	7.5	3.50	6.0	7.5	3.30	7.0	11	3.14	8.0	11	3.00	8.9	11	2.89	9.9	15	2.82	10.8	1	2
	3500	6.87	5.93	2.5	3	5.41	3.7	5.5	5.07	4.8	7.5	4.73	5.9	7.5	4.48	7.0	11	4.28	8.1	11	4.12	9.3	11	3.98	10.4	15	3.87	11.5	15	3.80	12.6	5	2
	4000	7.85	6.91	2.9	4	6.39	4.2	5.5	6.05	5.5	7.5	5.71	6.7	11	5.46	8.0	11	5.26	9.3	11	5.10	10.6	15	4.96	11.9	15	4.85	13.1	18.5	4.78	14.4	1	2
	4500	8.83	7.89	3.2	4	7.37	4.7	5.5	7.03	6.1	7.5	6.69	7.6	11	6.44	9.0	11	6.24	10.5	15	6.08	11.9	15	5.94	13.3	18.5	5.83	14.8	18.5	5.76	16.2	5	2
	5000	9.82	8.88	3.6	5.5	8.36	5.2	7.5	8.02	6.8	11	7.68	8.4	11	7.43	10.0	15	7.23	11.6	15	7.07	13.2	18.5	6.93	14.8	18.5	6.82	16.4	22	6.75	18.0	18.	2
TS-80	2000	7.27	6.01	2.3	3	5.51	3.5	5.5	5.16	4.7	5.5	4.88	5.9	7.5	4.65	7.0	11	4.46	8.2	11	4.30	9.4	11	4.16	10.6	15							4
	2300	8.37	7.12	2.7	4	6.63	4.0	5.5	6.28	5.4	7.5	6.01	6.8	11	5.78	8.1	11	5.59	9.5	11	5.43	10.9	15	5.29	12.2	15	5.17	13.6	18.5				2
	2500	9.09	7.86	2.9	4	7.38	4.4	5.5	7.04	5.9	7.5	6.76	7.3	11	6.53	8.8	11	6.34	10.3	15	6.18	11.8	15	6.04	13.3	18.5	5.93	14.8	18.5	5.83	16.3	2	2
	2800	10.1	8.98	3.3	4	8.50	4.9	7.5	8.16	6.6	11	7.89	8.2	11	7.67	9.9	15	7.48	11.5	15	7.31	13.2	18.5	7.18	14.8	18.5	7.06	16.5	22	6.95	18.1	2	2
	3000	10.9	9.72	3.6	5.5	9.25	5.4	7.5	8.91	7.1	11	8.64	8.9	11	8.42	10.7	15	8.23	12.5	15	8.07	14.3	18.5	7.93	16.0	18.5	7.81	17.8	22	7.71	19.6	2	2
	3300	12.0	10.8	4.0	5.5	10.4	5.9	7.5	10.0	7.9	11	9.77	9.8	15	9.55	11.8	15	9.36	13.8	18.5	9.20	15.7	18.5	9.06	17.7	22	8.94	19.6	30	8.83	21.6	2	2
	3500	12.7	11.5	4.2	5.5	11.1	6.3	7.5	10.7	8.3	11	10.5	10.4	15	10.3	12.5	15	10.1	14.6	18.5	9.95	16.6	22	9.81	18.7	22	9.69	20.8	30	9.59	22.9	3	2
	3800	13.8	12.7	4.6	5.5	12.2	6.8	11	11.9	9.1	11	11.6	11.3	15	11.4	13.6	18.5	11.2	15.8	18.5	11.1	18.1	22	10.9	20.3	30	10.8	22.6	30	10.7	24.8	0	2
	4000	14.5	13.4	4.8	7.5	13.0	7.1	11	12.7	9.5	11	12.4	11.9	15	12.1	14.2	18.5	12.0	16.6	22	11.8	19.0	22	11.7	21.4	30	11.6	23.7	30	11.5	26.1	3	2
TS-100	2000	10.9	9.13	3.2	4	8.43	5.0	7.5	7.92	6.7	11	7.51	8.5	11	7.17	10.3	15	6.88	12.1	15	6.63	13.9	15	6.42	15.6	18.5	6.23	17.4	22				4
	2300	12.5	10.8	3.7	5.5	10.1	5.8	7.5	9.61	7.8	11	9.21	9.9	15	8.87	11.9	15	8.59	14.0	18.5	8.34	16.0	18.5	8.13	18.0	22	7.94	20.1	30				2
	2500	13.6	11.9	4.1	5.5	11.2	6.3	7.5	10.7	8.6	11	10.3	10.8	15	10.0	13.0	15	9.73	15.2	18.5	9.48	17.5	22	9.26	19.7	30	9.08	21.9	30	8.91	24.1	3	2
	2800	15.3	13.6	4.7	5.5	12.9	7.2	11	12.4	9.7	15	12.0	12.2	15	11.7	14.7	18.5	11.4	17.2	22	11.2	19.7	30	11.0	22.2	30	10.8	24.7	30	10.6	27.2	0	2
	3000	16.4	14.7	5.1	7.5	14.1	7.8	11	13.6	10.4	15	13.2	13.1	18.5	12.8	15.8	18.5	12.6	18.5	22	12.3	21.2	30	12.1	23.8	30	11.9	26.5	37	11.7	29.2	3	2
	3300	18.0	16.4	5.5	7.5	15.7	8.5	11	15.3	11.4	15	14.9	14.4	18.5	14.6	17.3	22	14.3	20.2	30	14.0	23.2	30	13.8	26.1	30	13.6	29.1	37	13.5	32.0	7	2
	3500	19.1	17.5	5.8	7.5	16.9	8.9	11	16.4	12.1	15	16.0	15.2	18.5	15.7	18.3	22	15.4	21.4	30	15.2	24.5	30	14.9	27.7	37	14.8	30.8	37	14.6	33.9	3	2
	3800	20.7	19.2	6.3	7.5	18.5	9.7	15	18.1	13.0	15	17.7	16.4	22	17.4	19.8	30	17.1	23.2	30	16.9	26.6	37	16.7	30.0	37	16.5	33.3	45	16.3	36.7	7	2
	4000	21.8	20.3	6.6	11	19.7	10.1	15	19.2	13.7	18.5	18.8	17.2	22	18.5	20.8	30	18.3	24.4	30	18.0	27.9	37	17.8	31.5	37	17.6	35.1	45	17.4	38.6	3	2

Capacity is for inlet side for air at standard conditions (Inlet 101.325kPa (A) 20℃, 36% Relative Humidity)

Performance Data of TS PD Blower

Type	Rotary Speed r/min	theoretical Capacity m^3/min	Inlet Capacity Qs(m3/min),Shaft power La(kW),Motor power Po(kW)																														Motor Pole
			9.8kPa			19.6kPa			29.4kPa			39.2kPa			49kPa			58.8kPa			68.6kPa			78.4kPa			88.2kPa			98kPa			
	n	Qth	Qs	La	Po	Qs	La	Po	Qs	La	Po	Qs	La	Po	Qs	La	Po	Qs	La	Po	Qs	La	Po	Qs	La	Po	Qs	La	Po	Qs	La	Po	
TS-125	1450	15.8	13.4	4.1	5.5	12.5	7.0	11	11.8	9.7	15	11.3	12.4	15	10.9	14.5	18.5	10.6	17.7	22	10.3	20.3	30	10.0	23.0	30	9.82	25.7	30	9.64	28.3	37	4
	1750	19.0	16.7	4.9	7.5	15.8	8.1	11	15.2	11.3	15	14.7	14.5	18.5	14.3	17.6	22	13.9	20.8	30	13.6	24.0	30	13.4	27.2	37	13.2	30.4	37	13.0	33.5	45	4
	2000	21.8	19.5	5.6	7.5	18.6	9.2	11	18.0	12.9	15	17.5	16.5	22	17.1	20.2	30	16.7	23.8	30	16.4	27.5	37	16.2	31.1	37	16.0	34.8	45	15.8	38.4	45	4
	2300	25.0	22.8	6.4	7.5	21.9	10.6	15	21.3	14.8	18.5	20.8	18.9	22	20.4	23.1	30	20.0	27.3	37	19.8	31.5	37	19.5	35.7	45	19.3	39.9	55	19.2	44.0	55	2
	2600	28.3	26.1	7.2	11	25.2	12.0	15	24.6	16.7	22	24.1	21.4	30	23.7	26.2	37	23.4	30.9	37	23.1	35.6	45	22.9	40.4	55	22.7	45.1	55	22.5	49.8	75	2
	2800	30.5	28.3	7.8	11	27.5	12.9	15	26.8	18.0	22	26.4	23.1	30	26.0	28.2	37	25.6	33.3	45	25.4	38.4	45	25.1	43.5	55	24.9	48.6	55	24.7	53.7	75	2
	3000	32.7	30.5	8.3	11	29.7	13.8	18.5	29.1	19.3	22	28.6	24.8	30	28.2	30.2	37	27.9	35.7	45	27.6	41.2	55	27.4	46.7	55	27.2	52.2	75	27.0	57.6	75	2
TS-150	1450	25.3	21.8	6.3	7.5	20.5	10.6	15	19.5	14.8	18.5	18.8	19.0	22	18.2	23.2	30	17.7	27.4	37	17.3	31.7	37	17.0	35.9	45	16.7	40.1	55	16.5	44.3	55	4
	1750	30.5	27.1	7.5	11	25.8	12.6	15	24.9	17.7	22	24.2	22.7	30	23.6	27.8	37	23.2	32.9	45	22.8	38.0	45	22.4	43.1	55	22.2	48.2	55	21.9	53.2	75	4
	2000	34.9	31.6	8.5	11	30.3	14.3	18.5	29.4	20.1	30	28.7	25.9	30	28.2	31.8	37	27.7	37.6	45	27.3	43.4	55	27.0	49.2	75	26.7	55.0	75	26.5	60.8	75	4
	2300	40.1	36.9	9.7	15	35.7	16.3	22	34.9	23.0	30	34.2	29.7	37	33.6	36.4	45	33.2	43.0	55	32.8	49.7	75	32.5	56.4	75	32.2	63.0	75	32.0	69.7	90	2
	2600	45.3	42.3	10.8	15	41.1	18.3	22	40.3	25.9	30	39.6	33.4	45	39.1	40.9	55	38.6	48.5	55	38.2	56.0	75	37.9	63.5	75	37.7	71.1	90	37.4	78.6	90	2
	2800	48.8	45.9	11.6	15	44.7	19.7	30	43.9	27.8	37	43.2	35.9	45	42.7	44.0	55	42.3	52.2	75	41.9	60.3	75	41.6	68.4	90	41.3	76.5	90	41.1	84.6	110	2
	3000	52.3	49.4	12.3	15	48.3	21.0	30	47.5	29.7	37	46.9	38.4	45	46.3	47.2	55	45.9	55.9	75	45.5	64.6	75	45.2	73.3	90	44.9	82.0	110	44.7	90.7	110	2
TS-200	970	44.0	38.6	10.4	15	36.6	17.8	22	35.0	25.1	30	33.9	32.5	45	32.9	39.9	55	32.0	47.3	55	31.3	54.7	75	30.7	62.0	75	30.2	69.4	90	29.8	76.8	90	4
	1250	56.7	51.5	13.5	18.5	49.5	22.9	30	48.0	32.4	45	46.8	41.9	55	45.9	51.4	75	45.1	60.8	75	44.4	70.3	90	43.8	79.8	90	43.3	89.3	110	42.8	98.7	132	4
	1450	65.8	60.7	15.4	18.5	58.7	26.3	37	57.3	37.3	45	56.1	48.3	55	55.2	59.3	75	54.4	70.3	90	53.7	81.3	110	53.1	92.3	110	52.6	103	132	52.1	114	132	4
	1600	72.6	67.6	16.8	22	65.6	28.9	37	64.2	41.0	55	63.1	53.2	75	62.1	65.3	75	61.3	77.4	90	60.7	89.5	110	60.1	102	132	59.6	114	132	59.1	126	160	4
	1750	79.4	74.5	18.3	22	72.5	31.5	37	71.1	44.8	55	70.0	58.1	75	69.1	71.3	90	68.3	84.6	110	67.6	97.9	132	67.1	111	132	66.6	124	160	66.1	138	160	4
	1900	86.2	81.4	19.8	30	79.5	34.2	45	78.1	48.6	55	77.0	63.0	75	76.1	77.5	90	75.3	91.9	110	74.6	106	132	74.1	121	160	73.6	135	160	73.1	150	185	4
	2050	93	88.2	21.2	30	86.4	36.8	45	85.0	52.3	75	83.9	67.9	90	83.0	83.5	110	82.3	99.1	132	81.6	115	160	81.0	130	160	80.5	146	185	80.1	161	185	4
TS-250	970	56.1	49.8	12.9	15	47.5	22.2	30	45.8	31.5	37	44.5	40.9	55	43.5	50.2	75	42.6	59.6	75	42.0	68.9	90	41.4	78.2	90							4
	1250	72.3	66.2	16.4	22	63.9	28.5	37	62.3	40.6	55	61.1	52.7	75	60.1	64.8	75	59.2	76.8	90	58.6	88.9	110	58.0	101	132							4
	1450	83.8	77.9	18.7	22	75.7	32.8	45	74.1	46.8	55	72.9	60.9	75	71.9	74.9	90	71.1	89.0	110	70.4	103	132	69.9	117	160							4
	1600	92.5	86.7	20.6	30	84.5	36.2	45	83.0	51.7	75	81.8	67.2	90	80.8	82.8	110	80.0	98.3	132	79.3	114	132	78.8	129	160							4
	1750	101	95.5	22.5	30	93.4	39.5	55	91.8	56.5	75	90.6	73.5	90	89.7	90.5	110	88.9	108	132	88.2	125	160	87.7	142	160							4
	1900	110	104	24.5	30	102	43.0	55	101	61.5	75	99.5	80.1	110	98.6	98.6	132	97.8	117	160	97.1	136	160	96.6	154	185							4
	2050	119	113	26.4	37	111	46.5	55	110	66.6	90	108	86.7	110	107	107	132	106.7	127	160	106.0	147	185	105.5	167	185							4

Capacity is for inlet side for air at standard conditions (Inlet 101.325kPa (A) 20℃, 36% Relative Humidity

Performance Data of TS Vacuum Pump

Type	Rotary Speed r/min	Theoretical Capacity	Inlet Capacity Qs(m3/min),Shaft power La(kW),Motor power Po(kW)															Motor Pole
			-9.8kPa			-19.6kPa			-29.4kPa			-39.2kPa			-49kPa			
	n	Qth	Qs	La	Po	Qs	La	Po	Qs	La	Po	Qs	La	Po	Qs	La	Po	
TS-50V	2000	2.33	1.70	1.00	1.5	1.30	1.40	2.2	1.00	1.70	2.2							4
	2500	2.91	2.28	1.20	1.5	1.78	1.70	2.2	1.54	2.10	3	1.36	2.60	4				2
	3000	3.50	2.87	1.40	2.2	2.37	1.90	3	2.03	2.50	3	1.85	3.10	4				2
	3500	4.08	3.45	1.60	2.2	2.95	2.20	3	2.61	2.90	4	2.33	3.60	5.5				2
	4000	4.67	4.04	1.80	2.2	3.54	2.50	3	3.20	3.30	4	2.92	4.10	5.5	2.68	4.80	7.5	2
	4500	5.25	4.62	2.00	3	4.12	2.80	4	3.78	3.70	5.5	3.50	4.50	5.5	3.16	5.40	7.5	2
	5000	5.83	5.20	2.20	3	4.70	3.10	4	4.36	4.10	5.5	4.08	5.00	7.5	3.64	6.00	7.5	2
TS-65V	2500	4.91	3.88	1.80	2.2	3.20	2.60	3	2.70	3.40	4	2.46	4.20	5.5				2
	3000	5.89	4.86	2.20	3	4.18	3.10	4	3.68	4.10	5.5	3.24	5.10	7.5				2
	3500	6.87	5.84	2.50	3	5.16	3.70	5.5	4.66	4.80	7.5	4.22	5.90	7.5				2
	4000	7.85	6.82	2.90	4	6.14	4.20	5.5	5.64	5.50	7.5	5.20	6.70	11	4.86	8.00	11	2
	4500	8.83	7.80	3.20	4	7.12	4.70	5.5	6.62	6.10	7.5	6.18	7.60	11	5.84	9.00	11	2
	5000	9.82	8.79	3.60	5.5	8.11	5.20	7.5	7.61	6.80	11	7.17	8.40	11	6.83	10.0	15	2
TS-80V	2000	7.27	5.94	2.30	3	5.31	3.50	5.5	4.76	4.70	5.5	4.21	5.90	7.5				4
	2300	8.37	7.05	2.70	4	6.44	4.00	5.5	5.89	5.40	7.5	5.35	6.80	11				2
	2500	9.09	7.80	2.90	4	7.19	4.40	5.5	6.65	5.90	7.5	6.11	7.30	11	5.52	8.80	11	2
	2800	10.2	8.91	3.30	4	8.31	4.90	7.5	7.78	6.60	11	7.24	8.20	11	6.66	9.90	15	2
	3000	10.9	9.66	3.60	5.5	9.06	5.40	7.5	8.53	7.10	11	8.00	8.90	11	7.42	10.7	15	2
	3300	12.0	10.8	4.00	5.5	10.2	5.90	7.5	9.67	7.90	11	9.14	9.80	15	8.57	11.8	15	2
	3500	12.7	11.5	4.20	5.5	10.9	6.30	7.5	10.4	8.30	11	9.90	10.4	15	9.33	12.5	15	2
	3800	13.8	12.6	4.60	5.5	12.1	6.80	11	11.6	9.10	11	11.0	11.3	15	10.5	13.6	18.5	2
	4000	14.6	13.4	4.80	7.5	12.8	7.10	11	12.3	9.50	11	11.8	11.9	15	11.2	14.2	18.5	2
TS-100V	2000	10.9	9.04	3.20	4	8.14	5.00	7.5	7.35	6.70	11	6.55	8.50	11				4
	2300	12.6	10.7	3.70	5.5	9.83	5.80	7.5	9.05	7.80	11	8.26	9.90	15				2
	2500	13.6	11.8	4.10	5.5	11.0	6.30	7.5	10.2	8.60	11	9.41	10.8	15	8.55	13.0	15	2
	2800	15.3	13.5	4.70	5.5	12.7	7.20	11	11.9	9.70	15	11.1	12.2	15	10.3	14.7	18.5	2
	3000	16.4	14.6	5.10	7.5	13.8	7.80	11	13.0	10.4	15	12.3	13.1	18.5	11.4	15.8	18.5	2
	3300	18.0	16.3	5.50	7.5	15.5	8.50	11	14.7	11.4	15	14.0	14.4	18.5	13.2	17.3	22	2
	3500	19.1	17.4	5.80	7.5	16.6	8.90	11	15.9	12.1	15	15.1	15.2	18.5	14.3	18.3	22	2
	3800	20.7	19.1	6.30	7.5	18.3	9.70	15	17.6	13.0	15	16.8	16.4	22	16.0	19.8	30	2
	4000	21.8	20.2	6.60	11	19.4	10.1	15	18.7	13.7	18.5	18.0	17.2	22	17.2	20.8	30	2
TS-125V	1450	15.8	13.3	4.10	5.5	12.1	7.00	11	11.1	9.70	15	10.1	12.4	15				4
	1750	19.1	16.6	4.90	7.5	15.5	8.10	11	14.5	11.3	15	13.4	14.5	18.5	12.3	17.6	22	4
	2000	21.8	19.4	5.60	7.5	18.2	9.20	11	17.2	12.9	15	16.2	16.5	22	15.1	20.2	30	4
	2300	25.0	22.7	6.40	7.5	21.6	10.6	15	20.6	14.8	18.5	19.6	18.9	22	18.5	23.1	30	2
	2600	28.3	26.0	7.20	11	24.9	12.0	15	23.9	16.7	22	23.0	21.4	30	21.9	26.2	37	2
	2800	30.5	28.2	7.80	11	27.1	12.9	15	26.2	18.0	22	25.2	23.1	30	24.2	28.2	37	2
	3000	32.7	30.4	8.30	11	29.3	13.8	18.5	28.4	19.3	22	27.5	24.8	30	26.4	30.2	37	2
TS-150V	1450	25.3	21.6	6.30	7.5	19.9	10.6	15	18.4	14.8	18.5	16.9	19.0	22				4
	1750	30.5	27.0	7.50	11	25.3	12.6	15	23.9	17.7	22	22.4	22.7	30	20.8	27.8	37	4
	2000	34.9	31.4	8.50	11	29.8	14.3	18.5	28.4	20.1	30	27.0	25.9	30	25.5	31.8	37	4
	2300	40.1	36.8	9.70	15	35.2	16.3	22	33.9	23.0	30	32.5	29.7	37	31.0	36.4	45	2
	2600	45.3	42.1	10.8	15	40.6	18.3	22	39.3	25.9	30	38.0	33.4	45	36.5	40.9	55	2
	2800	48.8	45.7	11.6	15	44.2	19.7	30	42.9	27.8	37	41.7	35.9	45	40.2	44.0	55	2
	3000	52.3	49.3	12.3	15	47.8	21.0	30	46.6	29.7	37	45.3	38.4	45	43.9	47.2	55	2
TS-200V	970	44.0	38.3	10.4	15	35.7	17.8	22	33.3	25.1	30	30.9	32.5	45				4
	1250	56.7	51.2	13.5	18.5	48.6	22.9	30	46.3	32.4	45	44.0	41.9	55	41.4	51.4	75	4
	1450	65.8	60.4	15.4	18.5	57.9	26.3	37	55.6	37.3	45	53.3	48.3	55	50.8	59.3	75	4
	1600	72.6	67.3	16.8	22	64.8	28.9	37	62.6	41.0	55	60.3	53.2	75	57.8	65.3	75	4
	1750	79.3	74.2	18.3	22	71.7	31.5	37	69.5	44.8	55	67.3	58.1	75	64.9	71.3	90	4
	1900	86.1	81.1	19.8	30	78.6	34.2	45	76.5	48.6	55	74.3	63.0	75	71.9	77.5	90	4
	2050	92.9	88.0	21.2	30	85.6	36.8	45	83.5	52.3	75	81.3	67.9	90	78.9	83.5	110	4
TS-250V	970	56.0	49.5	12.9	15	46.4	22.2	30	43.8	31.5	37	41.2	40.9	55	38.3	50.2	75	4
	1250	72.2	65.9	16.4	22	62.9	28.5	37	60.4	40.6	55	57.8	52.7	75	55.1	64.8	75	4
	1450	83.8	77.5	18.7	22	74.7	32.8	45	72.2	46.8	55	69.7	60.9	75	67.0	74.9	90	4
	1600	92.5	86.4	20.6	30	83.6	36.2	45	81.1	51.7	75	78.7	67.2	90	76.0	82.8	110	4
	1750	101.1	95.2	22.5	30	92.4	39.5	55	90.0	56.5	75	87.6	73.5	90	85.0	90.5	110	4
	1900	109.8	104.0	24.5	30	101.0	43.0	55	98.9	61.5	75	96.5	80.1	110	93.9	98.6	132	4
	2050	118.5	112.8	26.4	37	110.1	46.5	55	107.8	66.6	90	105.5	86.7	110	102.9	107.0	132	4

Capacity is for inlet side for air at standard conditions(Inlet20℃,36% Relative Humidity,Outlet:101.3

TS 50 / TS 65 Bare Shaft Blower Outline Drawing

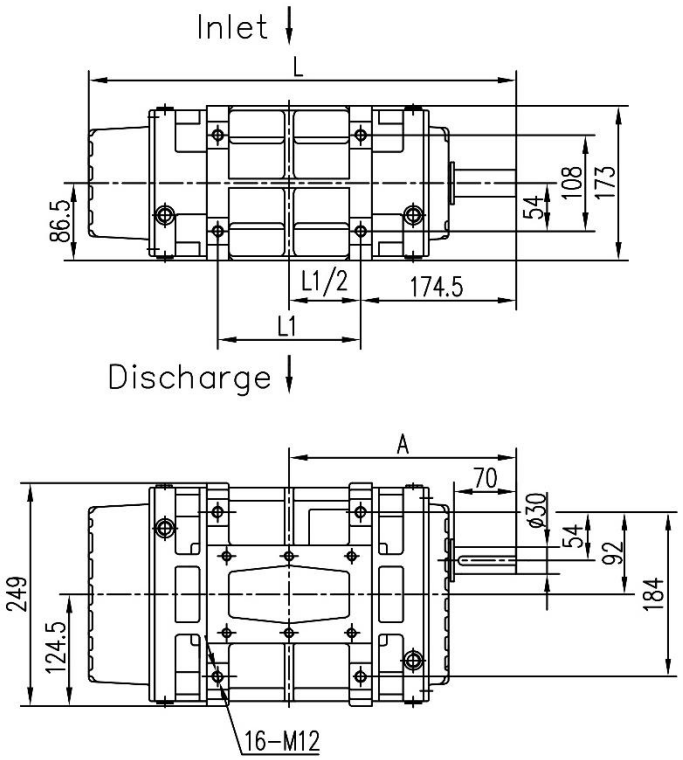

Inlet and outlet Flange Size

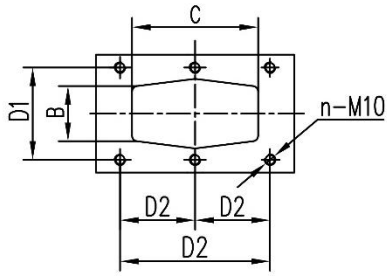

Type	Bore	A	B	C	L	L1	D1	D2	n	Weight
TS-50	ø50	217	37	70	404	85	80	68	4	46kg
TS-65	ø65	254.5	50	135	479	160	86	70	6	56kg

TS-80 / TS-100 Bare Shaft Blower Outline Drawing

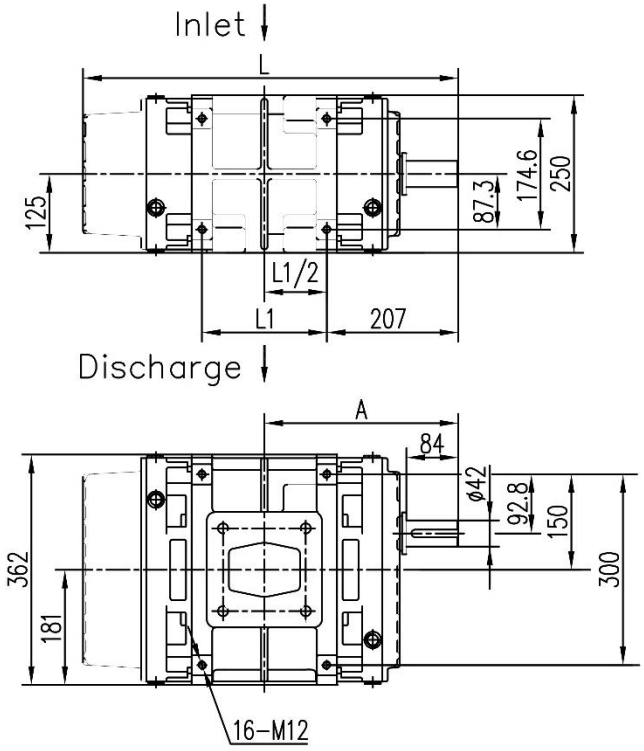

Inlet and outlet Flange Size

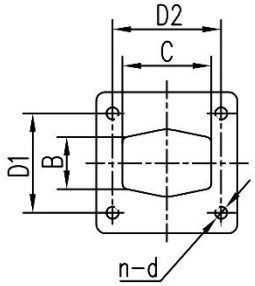

Type	Bore	A	B	C	L	L1	D1	D2	n-d	Weight
TS-80	ø80	267	75	110	514	120	114	100	4-M12	115kg
TS-100	ø100	305	90	125	590	196.5	130	130	4-M16	135kg

TS-125 TS-150 Bare Shaft Blower Outline Drawing

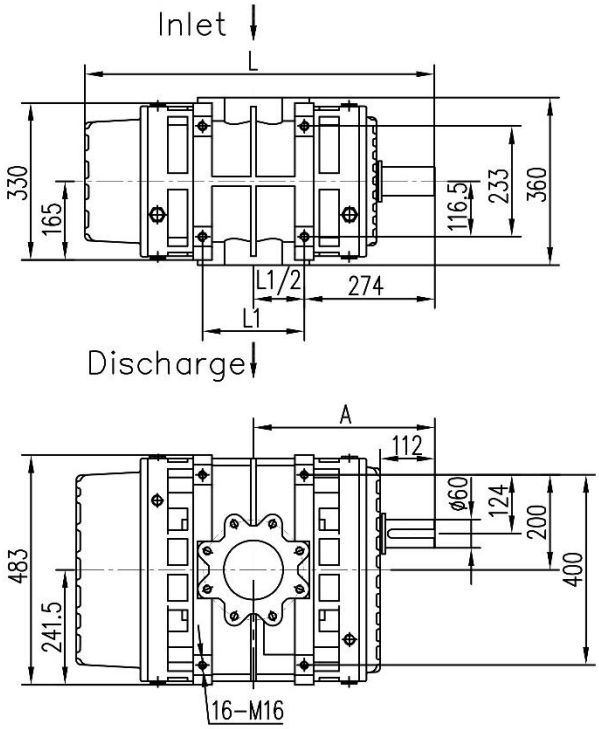

Inlet and outlet Flange Size

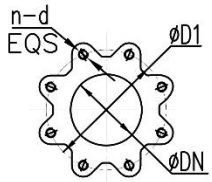

Type	Bore	A	L	L1	DN	D1	n-d	Weight
TS-125	ø125	381	735	214	125	210	8-M16	300kg
TS-150	ø150	457	887	365	150	240	8-M20	361kg

TS-200 TS-250 Bare Shaft Blower Outline Drawing

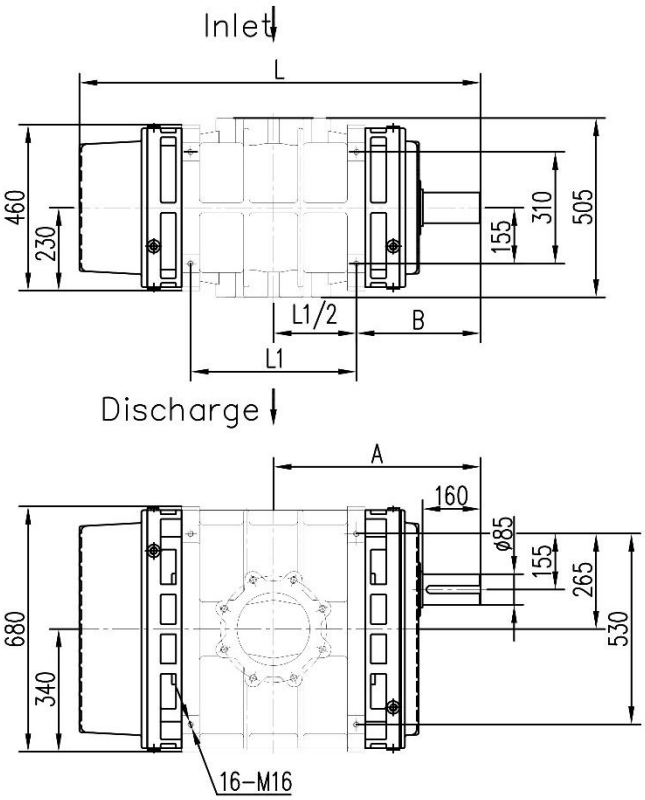

Inlet and outlet Flange Size

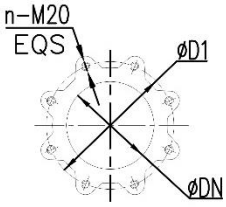

Type	Bore	A	B	L	L1	DN	D1	n	Weight
TS-200	ø200	574.5	339.5	1112.5	470	200	295	8	735kg
TS-250	ø250	644.5	344.5	1252.5	600	250	350	12	865kg

Outline and installation drawing for series TS Compact PD Blower

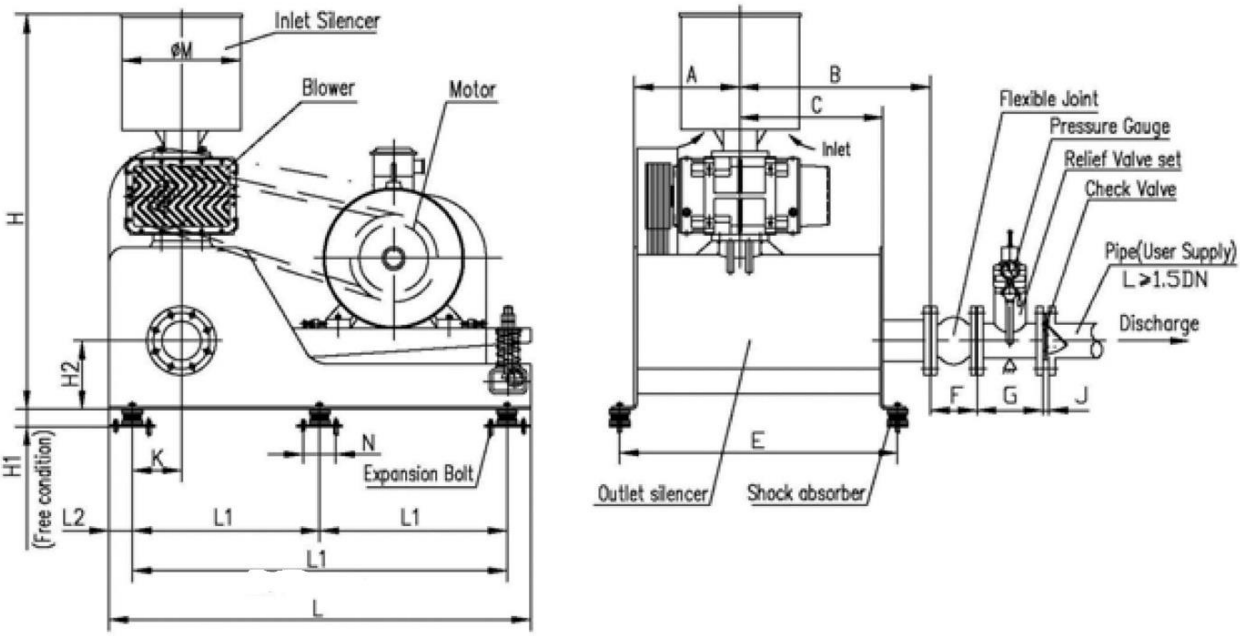

Exoansion Bolt Hole Distributing Diagram

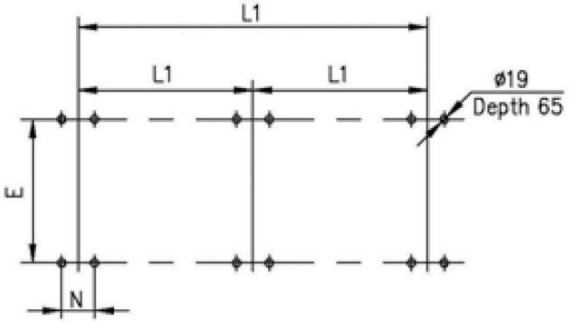

Outlet Flange Size

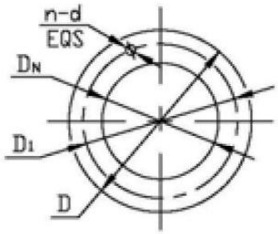

Note: ⚠Means user set up support by self

TYPE	A	B	C	E	F	G	J	L	L1	L2	K	H	H1	H2	M	N	DN	D1	D	n	d	Unit max weight (kg)
TS-50	300	400	320	698	105	140	18	1000	850	75	90	923	56	178	310	105	ø50	ø125	ø165	4	ø18	280
TS-65					115	150											ø65	ø145	ø185			340
TS-80	308	510	408	810	135	180		1350	600	75	157.5	1314	56	220	420	105	ø80	ø160	ø200	8		590
TS-100	350	570	458	890	150												ø100	ø180	ø220			700
TS-125	435	615	490	1020	165	200		1640	720	100	215	1732	56	290	540	105	ø125	ø210	ø250			1260
TS-150	505			1090	180	220						1752	66			134	ø150	ø240	ø285		ø22	1680
TS-200	620	860	735	1445	190	250	23	2155	950	125	300	2204	66	305	700	134	ø200	ø295	ø340			3000
TS-250	690	790	665		230	300	45					2224					ø250	ø350	ø395	12		3200

Outline and installation drawing for TS-V Compact Vacuum Pump

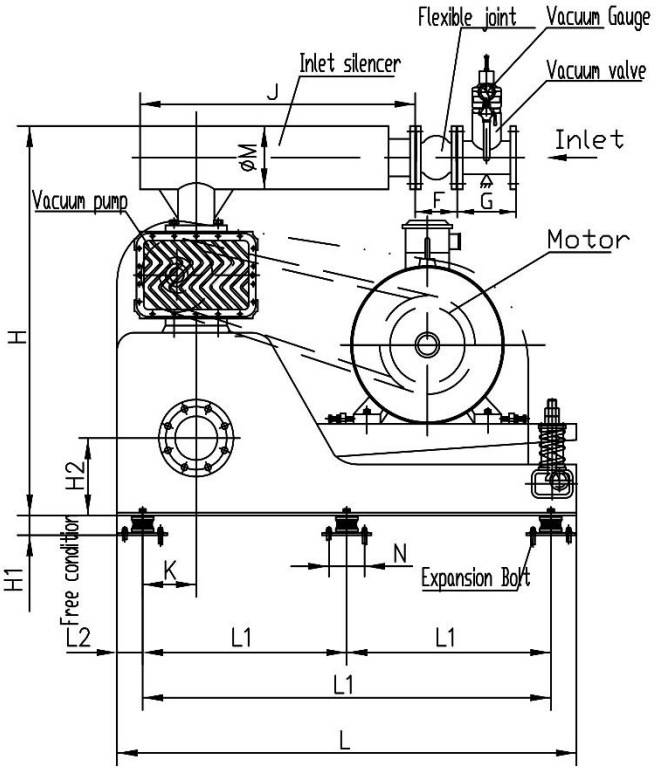

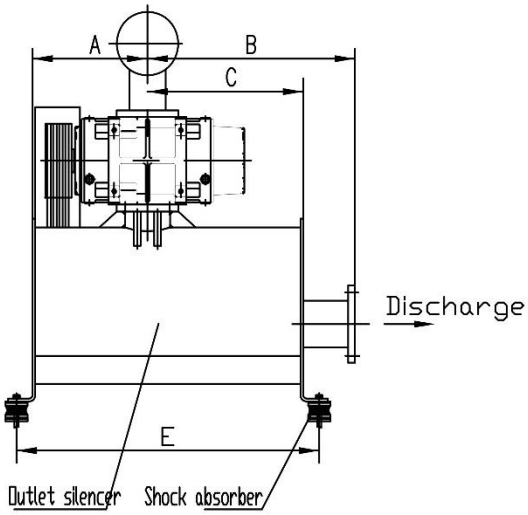

Expansion Bolt Hole Distributing Diagram

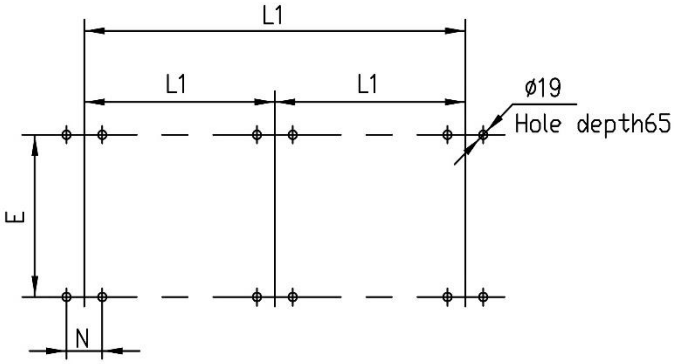

Inlet and Outlet Flange Size

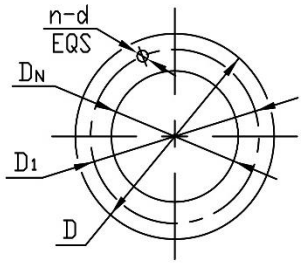

Note: ⚠ Means set up support by user

Type	A	B	C	E	F	G	J	L	L1	L2	K	H	H1	H2	M	N	D_N	D_1	D	n	d	Unit max Weight (kg)
TS-50V	300	400	320	698	105	140	700	1000	850	75	90	853	56	178	140	105	Ø50	Ø125	Ø165	4	Ø18	280
TS-65V					115	150	800								165		Ø65	Ø145	Ø185			340
TS-80V	308	510	408	810	135	180	1000	1350	600	75	157.5	1140	56	220	190	105	Ø80	Ø160	Ø200	8		590
TS-100V	350	570	458	890	150		1300								215		Ø100	Ø180	Ø220			700
TS-125V	435	615	490	1020	165	200	1500	1640	720	100	215	1505	56	290	260	105	Ø125	Ø210	Ø250			1260
TS-150V	505			1090	180	220	1700						66		281		Ø150	Ø240	Ø285		Ø22	1680
TS-200V	620	860	735	1445	190	250	1900	2155	950	125	300	1890	66	305	320	134	Ø200	Ø295	Ø340			3000
TS-250V	690	790	665		230	300	2100					1970			406		Ø250	Ø350	Ø395	12		3200

Outline and installation drawing for Compact PD blower(Include Acoustic Enclosure)

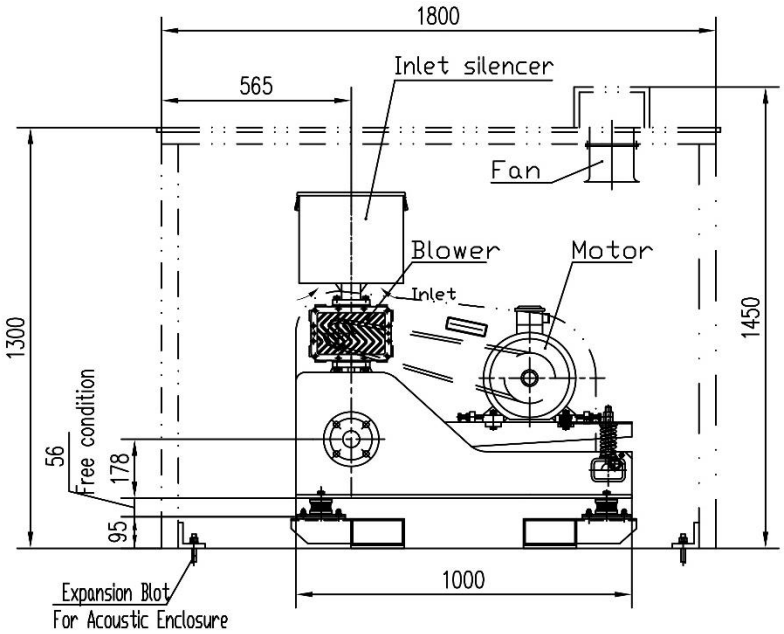

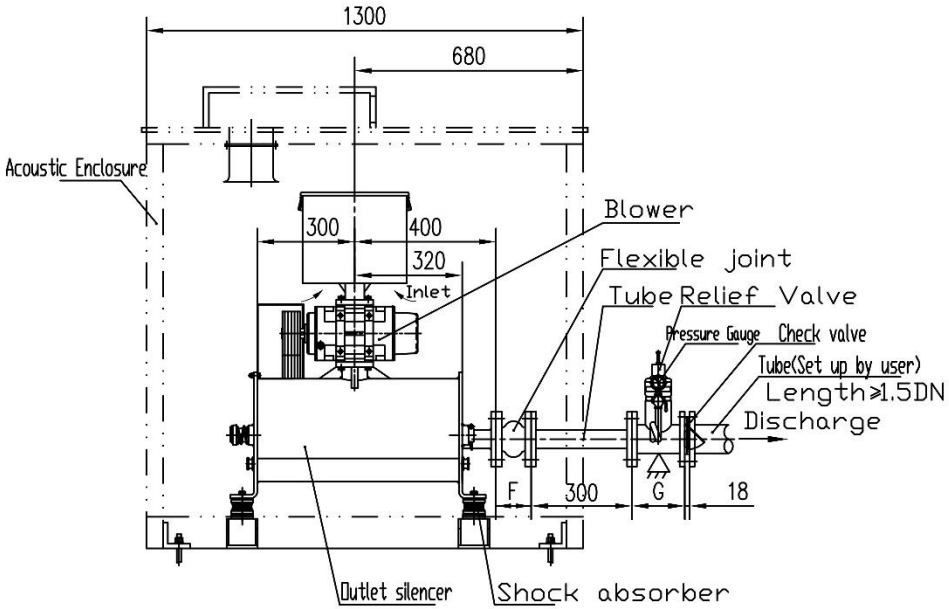

Discharge Flange Size

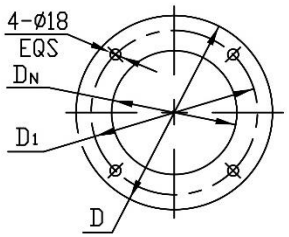

Note: 1. ⚠ Means set up support by user

2. Indicate installation place when order

3. There is no hole for cable in acoustic enclosure, Please preplan by user

Unit:mm

Type	F	G	DN	D1	D	Unit max weight(kg)	Acoustic enclosure Weight (kg)
50	105	140	Ø50	Ø125	Ø165	280	300
65	115	150	Ø65	Ø145	Ø185	340	

Outline and installation drawing for Compact PD blower(Include Acoustic Enclosure)

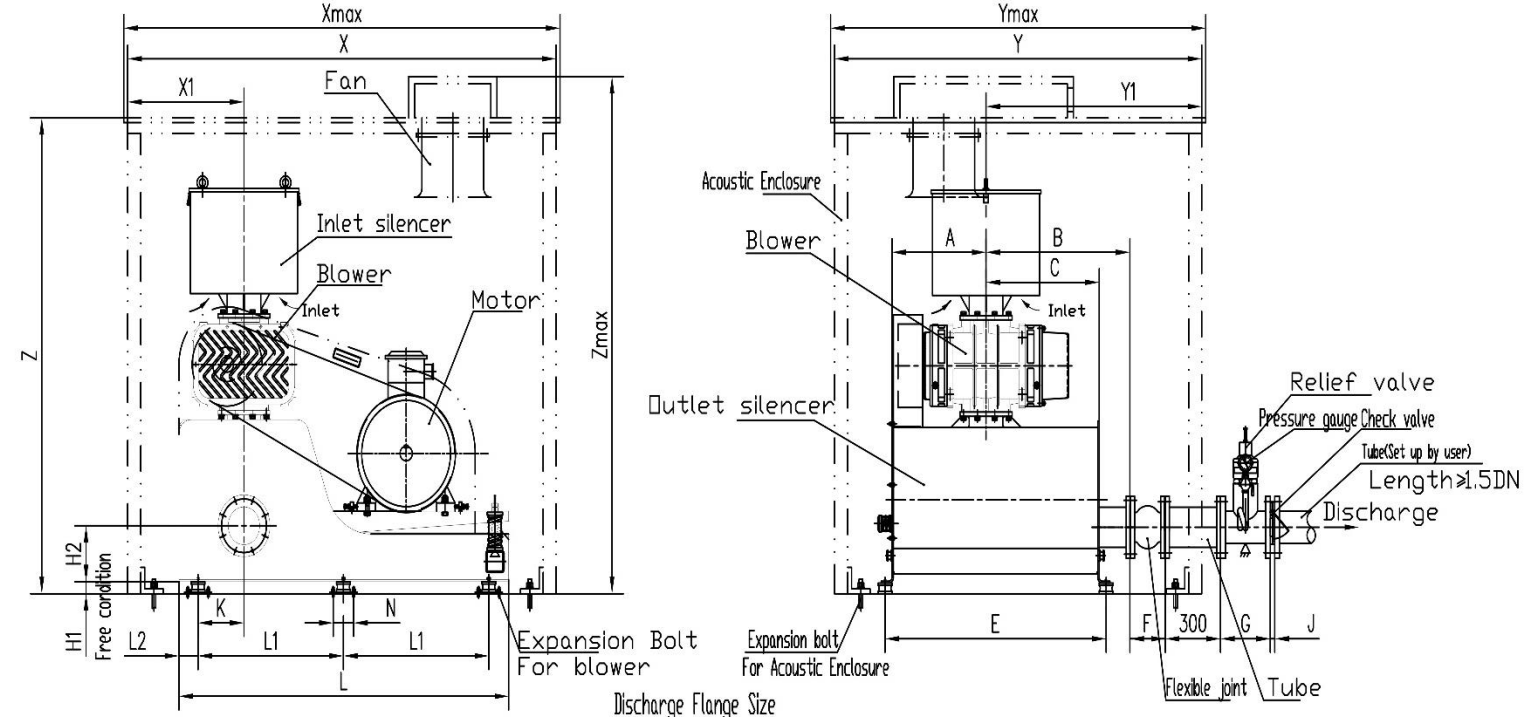

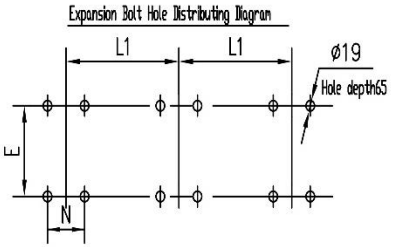

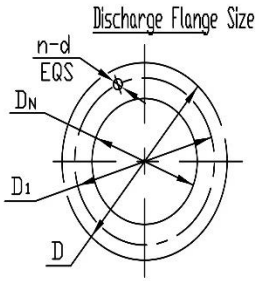

Note: 1. ⚠ Means set up support by user

2. Indicate installation place when order

3. There is no hole for cable in acoustic enclosure, Please preplan by user

Unit:mm

Type	A	B	C	E	F	G	J	L	L1	L2	K	H1	H2	N	DN	D1	D	n	d	X	X1	Xmax	Y	Y1	Ymax	Z	Zmax	Unit max weight(kg)	Acoustic enclosure Weight (kg)
80	308	510	408	810	135	180	18	1350	600	75	157.5	56	220	105	ø80	ø160	ø200	8	ø18	2100	660	2150	1600	870	1650	1700	1850	590	500
100	350	570	458	890	150										ø100	ø180	ø220							930				700	
125	435	615	490	1020	165	200		1640	720	100	215	56	290	105	ø125	ø210	ø250			2200	600	2250	1850	980	1900	2000	2240	1260	800
150	505			1090	180	220						66			ø150	ø240	ø285		ø22									1680	
200	620	860	735	1445	190	250	23	2155	950	125	300	66	305	134	ø200	ø295	ø340			2800	760	2850	2400	1250	2450	2600	2900	3000	1300
250	690	790	665		230	300	45								ø250	ø350	ø395	12						1220				3200	

TMS GmbH

Susanne-Beckers-Weg 7; 41179 Mönchengladbach, Germany

Tel: +49-(02161)-5739478

Fax: +49-(02161)-5739479

Email: info@tms-co.de

Website: www.tms-co.de